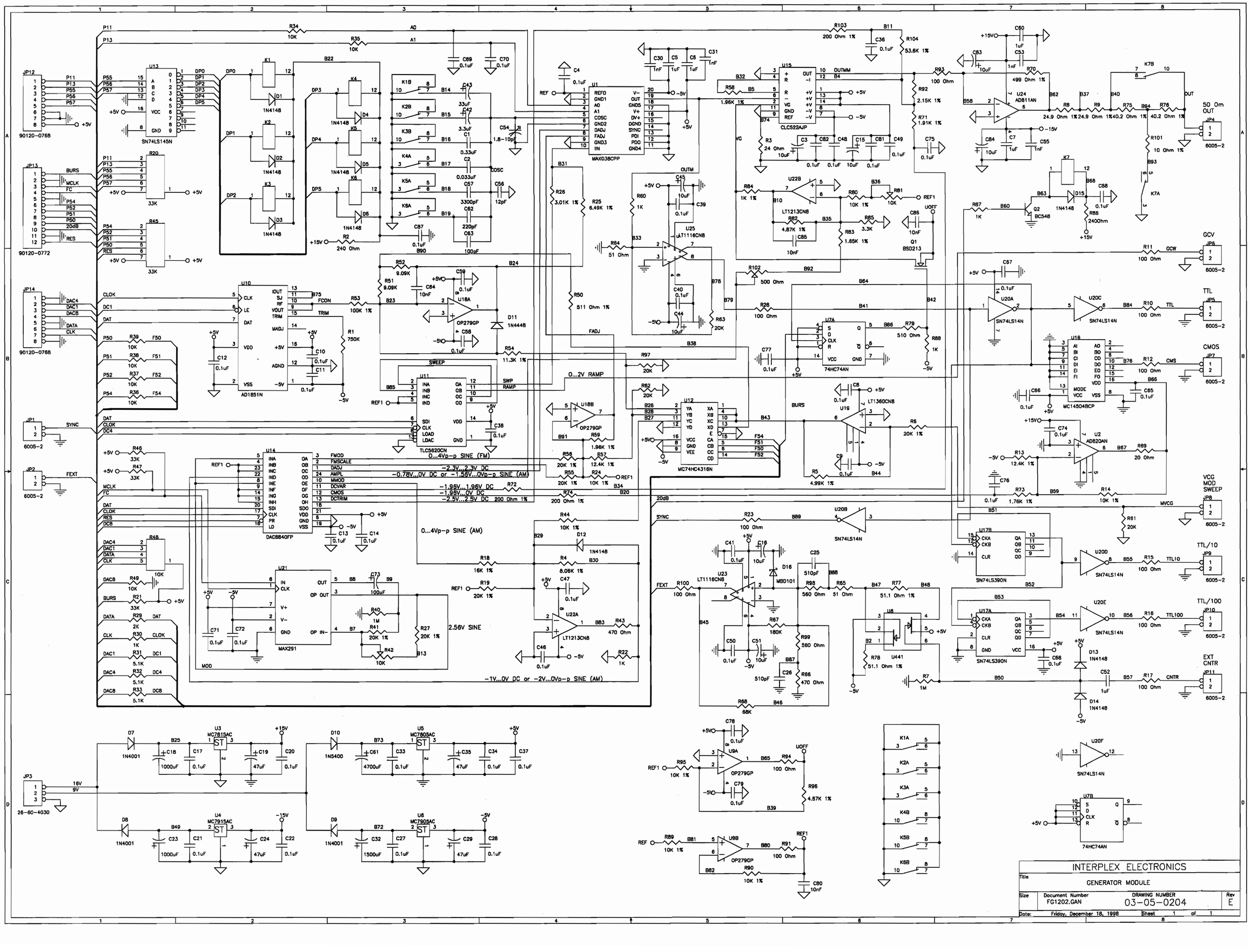

INTERPLEX ELECTRONICS
Title
GENERATOR MODULE
Size
Document Number
FG1202.GAN
DRAWING NUMBER
03-05-0204
Rev
E
Date: Friday, December 18, 1998
Sheet 1 of 1